QETTLE®

QETTLE 4-IN-1
BOILING & FILTERED WATER TAP
4 LITRE BOILER

INSTALLATION & USER GUIDE

INTRODUCTION

Thank you for purchasing a Qettle boiling water appliance. This product has been designed and manufactured to the very highest quality standards. Correctly installed and properly maintained in accordance with the following instructions, it will provide you with many years of reliable service.

This guide explains how to install a new Qettle boiling water appliance.

DO NOT ATTEMPT TO INSTALL THIS PRODUCT WITHOUT REFERENCE TO THIS GUIDE. FOR THE PRODUCT TO FUNCTION CORRECTLY IT MUST BE INSTALLED STRICTLY IN ACCORDANCE WITH THESE INSTRUCTIONS.

PARTICULAR ATTENTION MUST BE PAID TO ENSURING THAT THE WATER PRESSURE, WATER FLOW AND ELECTRICAL SUPPLY ARE WITHIN THE STATED PARAMETERS. THE MANUFACTURER RESERVES THE RIGHT TO RECOVER ANY COSTS INCURRED AS A CONSEQUENCE OF INCORRECT INSTALLATION.

The Qettle 4-in-1 System comprises 3 separately packaged assemblies:

1) Qettle 4-in-1 Tap (Part Number: Q4503)

2) Qettle Boiler - 4 litre (Part Number: Q8410)

3) Qettle water filter complete with a Q08 filter cartridge (Part Number: Q1400)

The Qettle 4-in-1 System must be installed using only the 3 genuine items listed above. Substituting any of them with other manufacturers' alternatives or failing to install and maintain the unit in strict accordance with these instructions will invalidate your product warranty. Qettle will not accept liability for damage or accidents resulting from the use of non-genuine components, incorrect installation or operation.

Study the diagrams, read this guide and plan the layout carefully before proceeding.

APPLICATION

This product is a boiling water device intended for domestic use only. The water supply pressure must be between minimum 1.5 BAR (22 psi) maximum 5 BAR (73psi).

Please Note: This diagram is for guidance only

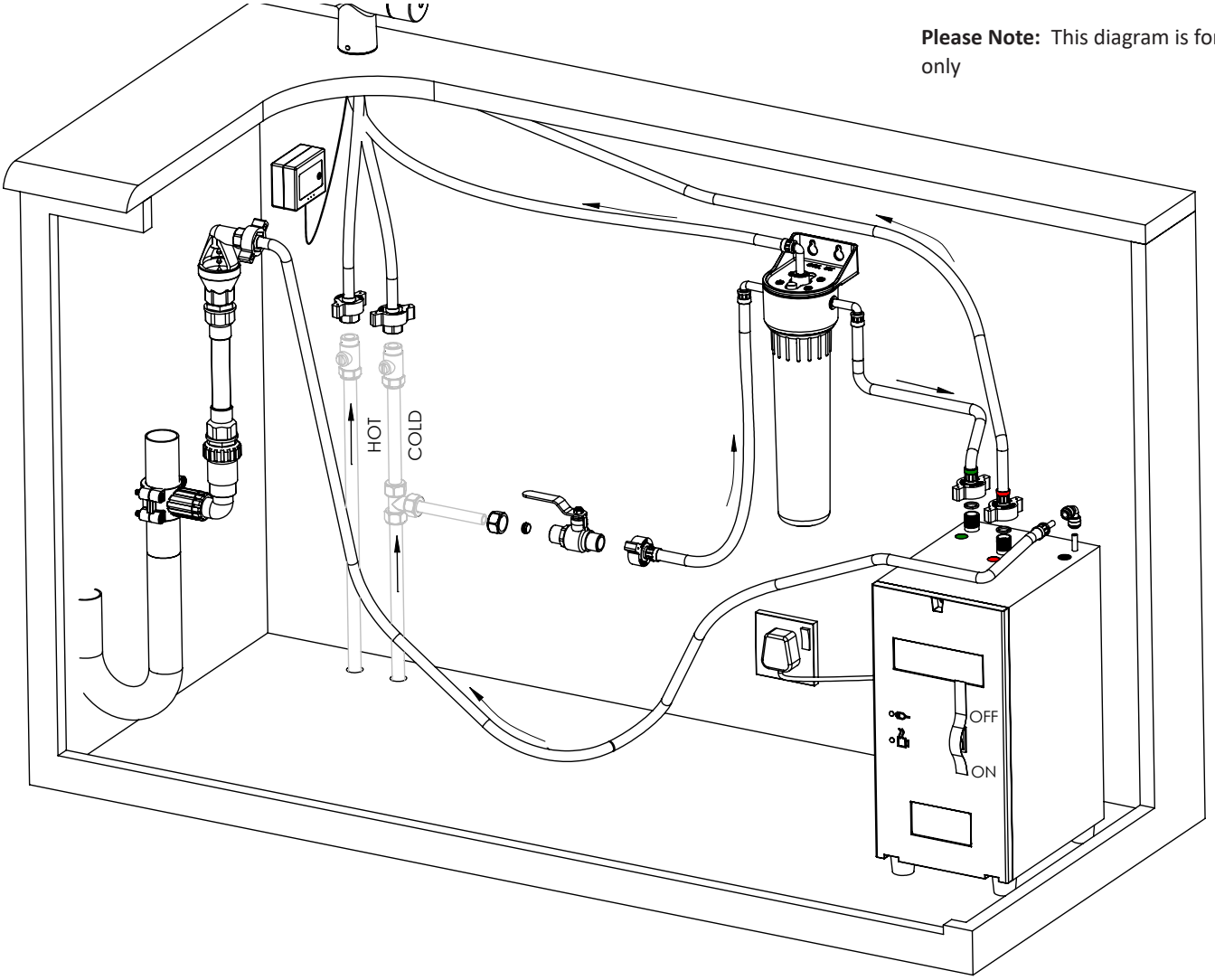

SAFETY

Take Note: Boiling water is potentially dangerous. It is the responsibility of the owner to take sensible precautions when operating the boiling water function of the Qettle tap and to instruct other family members and other new users to operate it safely.

The installation must be carried out by a suitably qualified professional in strict accordance with the instructions provided and comply with the UK Water Supply (Water Fittings) Regulations 1999 and safety standards.

- If a new electrical power supply is required you must seek the services of a qualified electrician.
- The boiler should be plugged into a socket that has been installed in compliance with local wiring regulations - seek the advice of a qualified electrician if in doubt. It is advisable to check the circuit to establish whether or not the addition of a Qettle tap will overload the circuit. **Important Note:** The boiler should not be fitted on the same electrical supply line with other appliances that require a constant power supply such as a fridge/freezer.
- The boiler is fitted with an electrical lead terminating in a fused plug for connection to the 230 volt 13 amp domestic electricity supply. It is important to use a socket with a built in switch and position it to provide convenient access to switch off the boiler.
- The electrical lead or plug must not be modified in any way.
- Turn off the mains water supply before commencing installation.
- Never lift the boiler by the braided flexible hoses.
- The power to the boiler must only be switched on once the installation is complete and the tank is full of water.
- Always turn off the electricity supply to the boiler before you close the mains stop valve. Restore power to the boiler after the mains stop valve has been opened.
- Young people and potentially vulnerable users must be instructed how to operate the boiling water function safely by a responsible adult.
- Refit the plastic safety clip to the boiling water handle after use.
- This is a domestic appliance and must not be installed in a commercial environment.

BOILER TECHNICAL DATA

DESCRIPTION	VALUE	UNIT
Dimensions	230 x 182 x 354	mm
Load	10	Amps
Voltage	230	Volts
Power	1500	Watts
Stored Temperature	100	°C
Min Water Pressure	1.5	Bar
Max Water Pressure	5	Bar
Heating Up Time	20	Mins
Recovery Time	10	Mins
Boiler Capacity	4	Litres
Pressure Release Valve Rating	8	Bar

BEFORE YOU BEGIN

1. Check the mains water pressure. The pressure must not be below 1.5 BAR (22 psi) or above 5 BAR (73psi), measured during a low demand period – (mid-morning or mid-afternoon). If the pressure exceeds 5 BAR a pressure reducing valve must be installed in the cold mains supply to protect both the boiler and the water filter housing. The optimum pressure is 3 bar (44psi). A suitable pressure reducing valve can be purchased at **www.qettle.com**
2. The unit must be installed in a frost free environment.
3. Ensure that the cabinet is well ventilated. If in doubt it is advisable to improve the circulation of air by drilling some holes in the top and bottom of the rear panel.
4. Be careful when making the various connections to the mains water stop valve and the boiler. Do not be tempted to over-tighten the connections. It is only necessary to firmly hand tighten the nuts using the patented NutRunna® plastic tightening devices provided to make a secure watertight seal.
5. Locate the existing hot and cold water supply pipes.
6. Shut off the mains water supply.
7. Switch off the mains electricity supply at the socket.

COMPONENTS LIST

1. Qettle tap
2. Filter cartridge change indicator module
3. Safety clip for boiling water handle
4. AA Batteries for filter cartridge change indicator module x2
5. Tap clamp
6. Tap clamping nut x2
7. Box Spanner for tap clamp nuts
8. Compression washer for underside of tap
9. Cable ties x4
10. NutRunna® hand-tightening device for G1/4” nuts x2
11. NutRunna® hand-tightening device for G1/2” nuts x4
12. Qettle boiler
13. Push-fit elbow
14. Vent assembly
15. Saddle clamp
16. Vent hose
17. Vent assembly elbow
18. Pipe cutter
19. Water filter housing assembly
20. Q08 water filter cartridge
21. Water filter retaining screws
22. Stop valve

Supplied in box with Tap

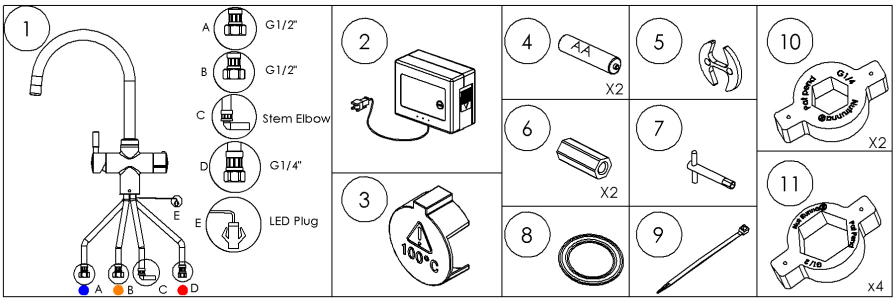

Supplied in box with Boiler

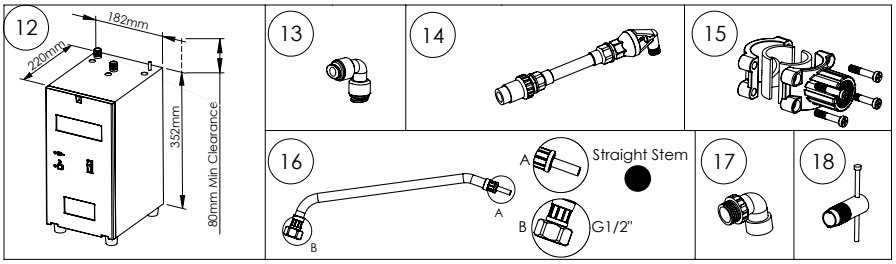

Supplied in box with Filter System

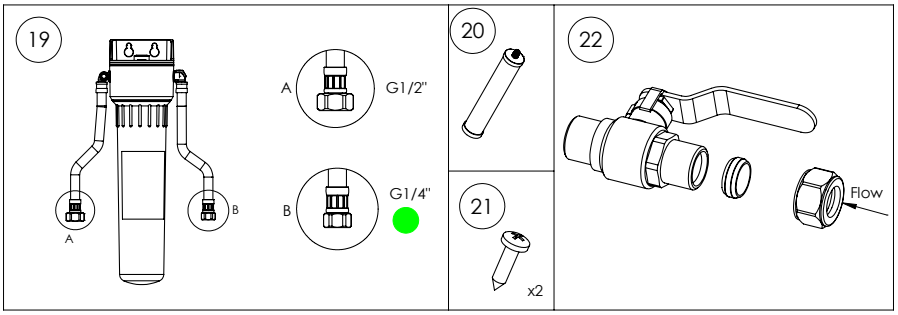

THE INSTALLATION PROCEDURE

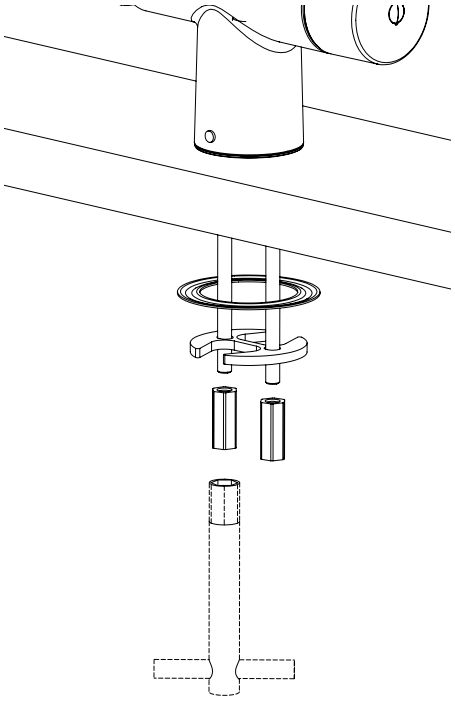

INSTALLING THE QETTLE 4-IN-1 KITCHEN TAP

Carrying out this operation first will make it easier to plan the layout inside the cabinet. For safety it is advisable to locate the tap out of the reach of smaller children. **Important note:** The tap fixing studs are factory fitted and should not be tightened or loosened.

1. The tap will require a standard 35mm hole. **Important Note:** before cutting the hole make sure that there is sufficient clearance between the tap handles and the back splash when the handles are in the fully open position.

2. Insert the flexible hoses and the wire lead through the 35mm hole. To fit all the hoses through the hole, begin by inserting the hot and cold G1/2" flexible hoses (1.A & 1.B) through first, then thread the boiling water hose (1.D) and the wire lead (1.E) through. Finally, thread the grey push fit stem elbow at the free end of the cold filtered water hose (1.C). The tap hoses push into the tap rather than screw in so do not be alarmed that they rotate inside the body of the tap.

3. Position the tap for the owners' convenience. (The tap can be rotated 180° for left handed operation of the boiling water function).

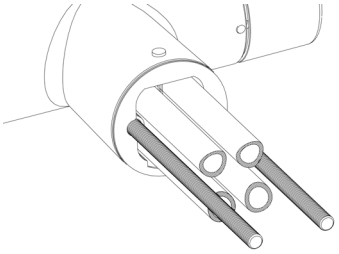

4. Working inside the cabinet, slide the gasket (8) and the clamp plate (5) over the hoses and the two studs at the base of the tap. Screw the two clamp nuts (6) on to the studs using the box spanner (7).

5. Check the alignment of the tap then tighten the two clamp nuts using the box spanner to firmly secure it on the work surface.

PLAN THE LAYOUT INSIDE THE CABINET

- Determine the best positions for the hot and cold mains water supply.

- Determine the best positions for the boiler and the filter unit, making sure that the boiler power cable, the flexible hoses, and the filter cartridge change indicator cable, are all within comfortable reach of their respective connection points without them being compressed, stretched or kinked.

- The boiler must be installed upright with the hose connections at the top, never on its side.

- Leave access to the boiler for future servicing requirements. The boiler will require servicing/replacing in the future so do not box it in.

- Allow a minimum clearance of 80mm at the top of the boiler for the connecting hoses.

- Choose a location for the filter unit (19) and the stop valve (22) to allow convenient access for future filter cartridge changes.

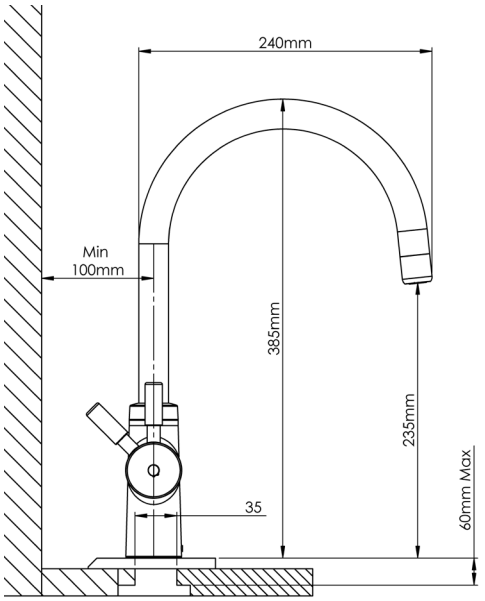

THE PLUMBING

Important Note: Before installing the new tap it is essential that you thoroughly flush through the supply pipes in order to remove any remaining swarf, solder or other impurities. Failure to carry out this simple procedure could cause problems or damage to the workings of the tap.

1. Provide a hot and cold water supply for the tap. (We recommend that service stop-valves are fitted in both the hot and cold water supplies to the tap.)

2. Tee off the cold mains water supply to provide an independent feed to the water filter.

3. Install the stop-valve (22) inline on the independent feed to the filter. **Important Note**: the ends of the stop valve are not the same. One end has an internal chamfer to connect to compression pipework; the opposite end has a flat washer face to suit the G1/2" (1/2" BSP) nut and washer of a flexible hose (refer to diagram (22) in component list.)

4. Connect the hot and cold G1/2" flexible hoses to the respective hot and cold supplies and tighten them firmly to make a watertight seal — two G1/2" NutRunna hand tightening devices (11) are supplied loose with the tap for this purpose. The tap hose with the blue indicator should be connected to the cold supply and the hose with the orange indicator to the hot supply.

INSTALL THE FILTER UNIT

Important Note: The filter unit must be installed inside a cupboard. Long term exposure to direct light can degrade the plastic sump leading to eventual failure.

1. Position the filter unit (19) vertically with the hoses at the top, in its previously determined location.

2. Mark the positions for the two filter unit support screws (21) using the holes in the filter bracket as a guide.

3. Set the filter unit aside and screw in the two screws leaving the heads slightly proud (approximately 4mm).

4. Take the G1/2"nut (19.A) at the free end of the filter inlet hose and place one of the G1/2" Nutrunna® (11) over the nut. Screw the nut on to the G1/2" male outlet thread of the stop valve (22). Hand tighten sufficient to make a watertight seal. Do not overtighten.

5. Take the grey push fit stem elbow at the free end of the cold filtered water hose (1.C) attached to the tap, wet the stem before pushing it firmly into the female outlet at the top of the filter. **Important Note:** Ensure that the stem connector is pushed fully home — 10mm of the stem should enter the female connector.

6. Hang the filter unit on the two screws. If the panel is too thin to mount the filter securely strengthen the panel with a wooden batten.

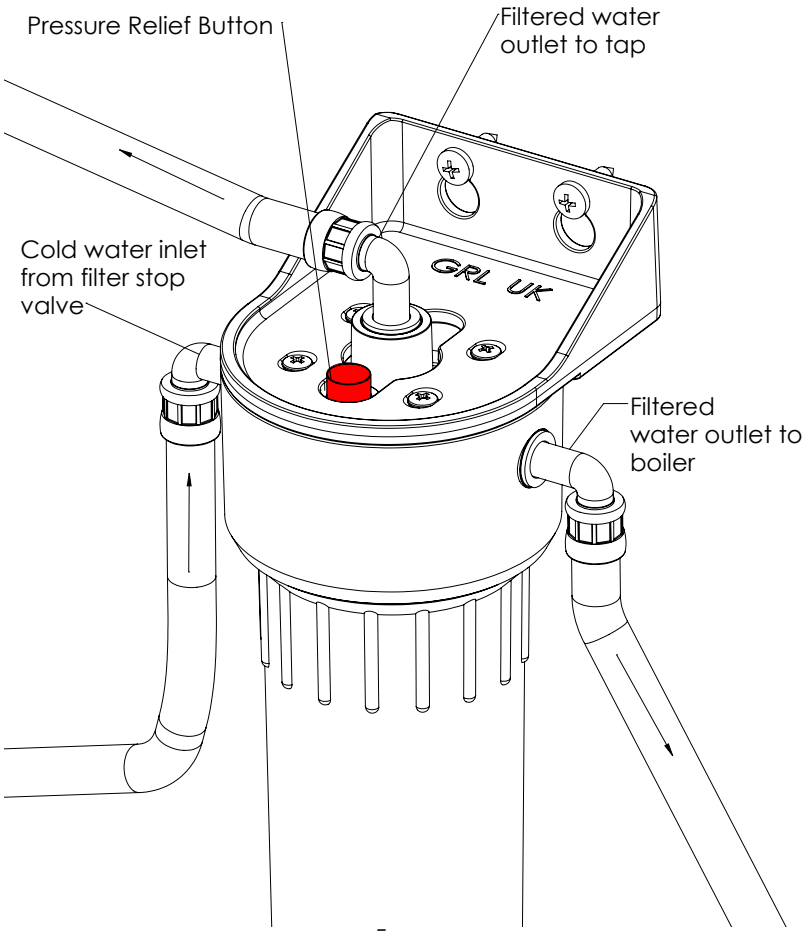

INSTALL THE PLASTIC VENT ASSEMBLY

Important Note: The vent pipe must be installed vertically with the air-gap at the top and strictly in accordance with the instructions. The vent pipe conforms to the building regulations and on no account should be shortened or modified in any way.

To avoid debris blocking the vent and causing it to overflow do not, under any circumstances, install the saddle clamp on the U Bend, waste trap, side/underside of the waste pipe.

If the Qettle system is being installed on a sink with a waste disposal unit, the vent assembly must be installed on a separate waste pipe to the waste disposal unit.

Choose a convenient position to fit the saddle clamp (15) on a vertical section (Option 1) of the waste pipe, or alternatively on a horizontal section (Option 2). When installing the saddle clamp horizontally the elbow (17) is not required. Be careful to allow sufficient clearance for the height of the vent assembly and enough room to operate the pipe cutter (18).

1. Separate the two halves of the saddle clamp by unscrewing and removing the four nuts and bolts. Discard the two black rubber inserts for 41mm waste pipe. Leave them in place for 32mm pipe.

2. Place the saddle clamp in position on the chosen section of waste pipe and re-assemble the clamp. Tighten the nuts and bolts securely to make a watertight seal.

3. Insert the pipe cutter (18) into the saddle clamp and cut a hole in the waste pipe by rotating it to the right until it breaks through. (see diagram).

4. Screw the vent assembly (14) into the saddle clamp. When the saddle clamp is installed on a vertical section of the waste pipe screw the elbow in first and use the lock nut to secure the air gap assembly in the vertical position.

5. Take the vent hose (16) (black indicator) and place one of the G1/2" NutRunna® over the nut (16.B). Screw the nut on to the G1/2" male thread at the top of the vent assembly (14). Hand tighten the nut firmly, sufficient to make a watertight seal. Do not overtighten.

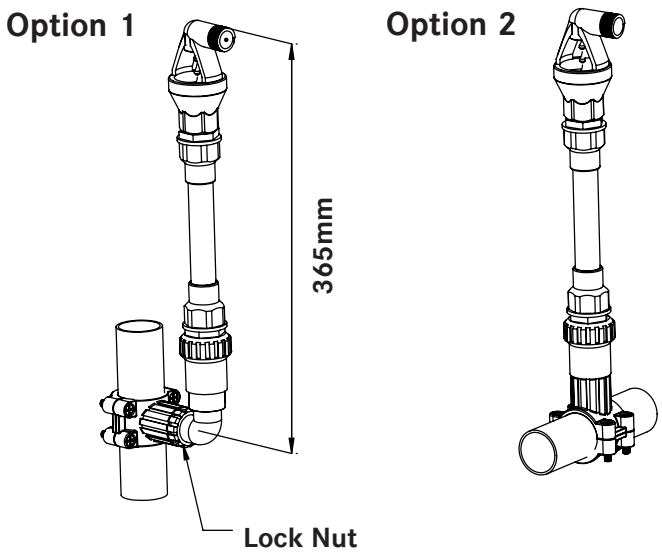

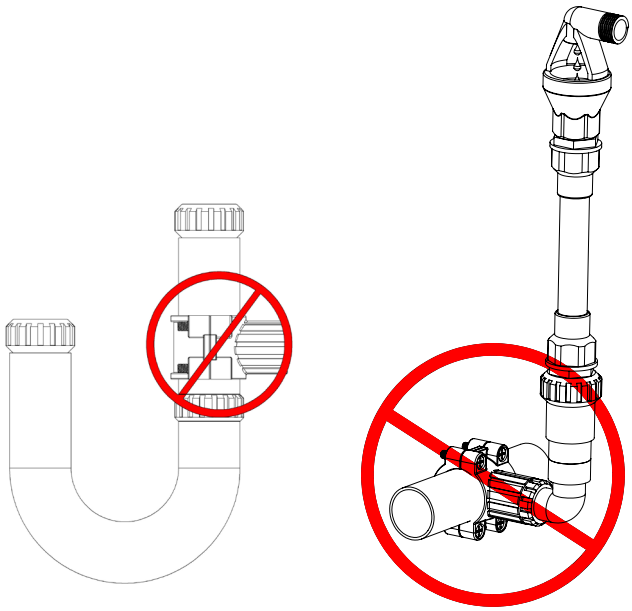

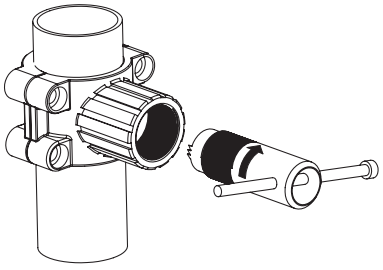

INSTALL THE BOILER

Important note: Do not plug the boiler into the power supply at this stage.

For ease of installation the boiler connections and the flexible hoses are colour coded:

Green - Filtered water

Red - Boiling water

Black - Vent

1. Remove the protective caps from the three connections on the top of the boiler.

2. Place the boiler (12) in position upright on a flat surface inside the cabinet with the connections to the top.

3. Take the G1/4" female nut (19.B) at the free end of the filter outlet hose (green indicator). Remove the plastic cap from inside the nut. **Important note:** be careful to make sure the washer retained in the nut does not fall out when removing the cap. Take one of the G1/4" NutRunna® (10) and place over the nut. Screw the nut onto the G1/4" male boiler inlet (green dot). Hand tighten sufficient to make a watertight seal. Do not overtighten.

4. Take the G1/4" nut (Red Indicator) of the boiling water hose (1.D) attached to the base of the tap (red indicator). Remove the plastic cap from inside the nut. **Important note:** be careful to make sure the washer retained in the nut does not fall out when removing the cap. Take the spare G1/4" NutRunna® (10) and place over the nut. Screw the nut onto the G1/4" boiling water outlet of the boiler (red dot). Hand tighten the nut firmly, sufficient to make a watertight seal. Do not overtighten.

5. Take the push-fit elbow (13) and the free end of the vent hose (16.A). Push the push-fit elbow on to the grey push-fit stem (Black Indicator) on the end of the vent hose. Push the remaining free end of the push-fit elbow firmly home in place on to the metal spigot (black dot) protruding from the top of the boiler.

6. Use the cable ties (9) to neatly secure the various flexible hoses out of harm's way.

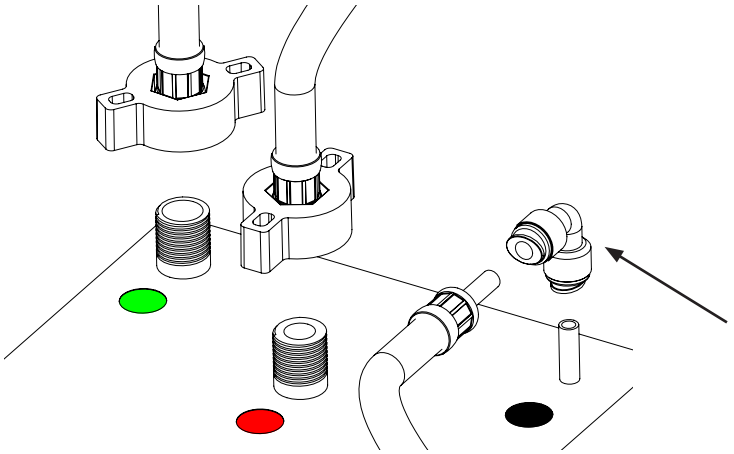

INSTALL THE FILTER CHANGE INDICATOR MODULE

1. Choose a convenient location for the module, making sure that the attached power cable is within easy reach of the mating cable attached to the base of the tap.

2. Secure the module in place using the self-adhesive Velcro pad provided.

3. Plug the two cables together.

4. Install the 2x AA batteries (4) in the module (2). A "bleep" will confirm that they are correctly installed. The LED light on the tap will glow RED followed by YELLOW before turning off.

The LED indicator:

Red - Indicates that the water filter cartridge needs replacing.

Yellow - Indicates that the two AA batteries in the module need replacing.

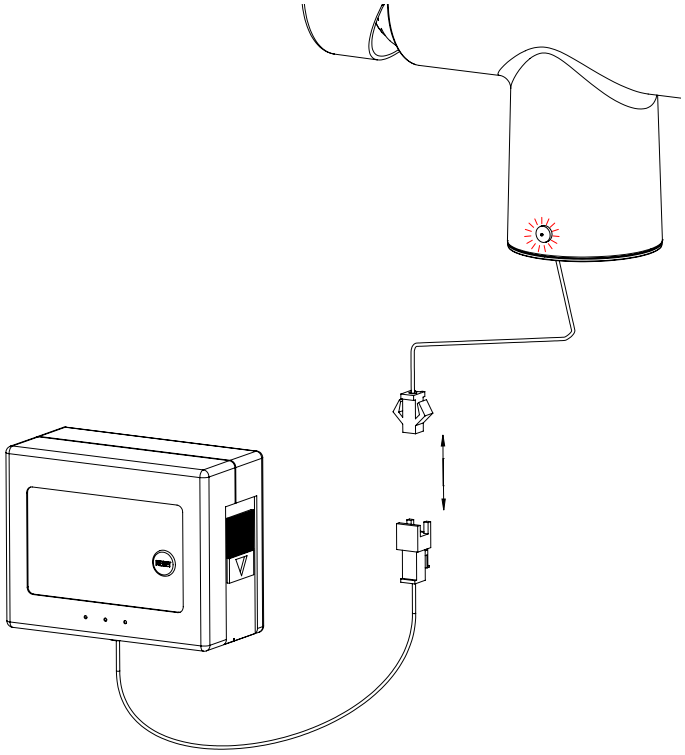

COMMISSIONING THE SYSTEM

1. Install the filter cartridge into the filter housing. **(Refer to the separate Changing the filter cartridge section on page 10).**

2. Turn on the water supply.

3. Operate the boiling water function for 3 minutes to flush the system. **(Please see the OPERATING THE QETTLE TAP overleaf).**

4. Turn the tap off and check the connections for leaks.

5. Plug the boiler into the mains electricity supply socket.

6. Remove the warning strip covering the “ON-OFF” switch on the front of the boiler and turn the switch to the “ON” position. Check the top LED (Plug logo) on the boiler turns green to indicate power is on. The lower LED (Mug logo) will turn red to indicate the boiler is heating up.

7. Wait for 20 minutes and then check that water is discharging from the vent pipe. **Important Note**: If water does not start to discharge from the vent pipe into the cup after 20 minutes, switch off the power, operate the boiling water function on the tap to release the pressure, and refer to the Troubleshooting Guide overleaf.

8. Allow approximately 20 minutes for the boiler to reach full operating temperature, indicated by the lower LED turning green.

9. Operate the tap boiling water function for a minute to exhaust trapped air from the system.

10. The system is now ready for use. Please demonstrate to the homeowner the procedure for replacing the water filter cartridge and explain the importance of scheduled cartridge changes to maintain the quality of the filtered water and the boiler warranty.

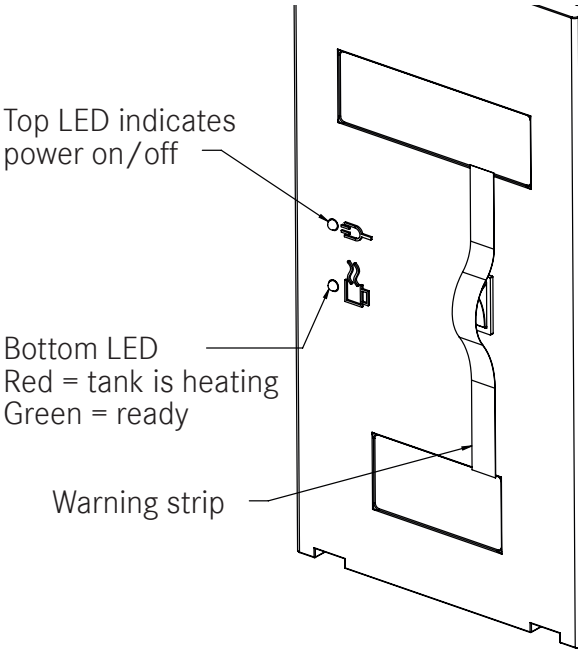

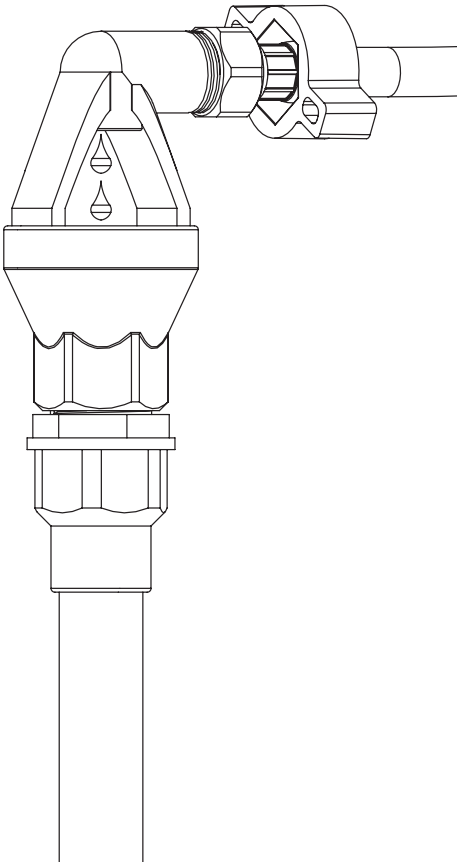

OPERATING THE QETTLE 4-IN-1 TAP

The body of the tap is clearly marked to show the 4 functions.

NORMAL UNFILTERED MAINS HOT AND COLD WATER.

The hot and cold water is controlled in the normal manner by the lever opposite the boiling/cold filtered water lever.

BOILING FILTERED WATER

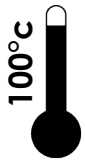

Remove the red safety clip (3)

Depress the button on the boiling water handle to release the safety lock and rotate it.

Important Note. It is the responsibility of the user to check that the tap is shut off correctly. The safety clip can only be re-fitted when the handle is correctly located in the OFF position.

THE CORRECT WAY TO DISPENSE THE BOILING WATER.

Position the outlet of the spout inside the receptacle you are about to fill (saucepan, cup or jug for example). Operate the boiling water while gradually lowering the receptacle as it fills.

COLD FILTERED WATER

The cold filtered water function is controlled by turning the boiling filtered water lever in the opposite direction, but without the need to depress the lever to disconnect the safety lock beforehand.

CARE AND MAINTENANCE

CLEANING THE QETTLE TAP

To maintain the appearance of this fitting, ensure it is cleaned only using a clean, soft damp cloth. A solution of warm water and mild liquid detergent may be used where necessary, and then the fitting rinsed thoroughly. Abrasive cleaners or acidic cleaners MUST NOT BE USED under any circumstances. Avoid contact with all solvents.

CHANGING THE BATTERIES IN THE FILTER CARTRIDGE CHANGE MODULE.

If necessary separate the module from the Velcro pad and slide off the battery cover at the side of the module. Remove the battery carrier and replace the two old AA batteries with two new ones. Press the reset button.

REMOVING THE BOILER

1. Disconnect the electricity supply to the boiler.
2. Operate the boiling water function and run the boiling water until the water flowing from the spout runs cold.
3. Shut off the water supply to the boiler.
4. Operate the boiling water for a second time until the water stops flowing to release the pressure in the boiler.
5. Disconnect the hoses from the boiler using a suitable container to catch residual water.
6. Remove the boiler carefully, unscrew the brass drain nut at the base and pour out the water it contains.

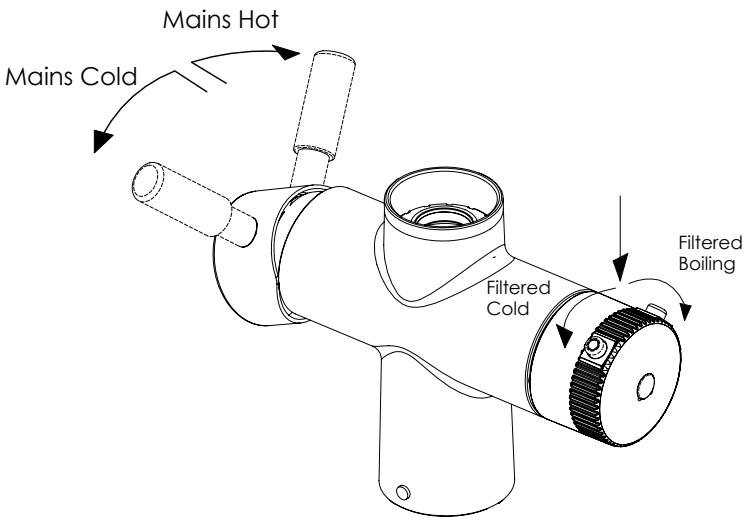

WATER FILTER MAINTENANCE

- The water filter supplied with this unit is designed to both protect the boiler and remove sediment, chlorine and other potentially harmful contaminants.
- Changing the filter cartridge every 6 months will keep the boiler in good condition. Qettle will not accept responsibility for boiler failures due to the build-up of lime-scale if the filter cartridge has not been replaced at the recommended 6 month intervals.
- The occasional wash in warm soapy water is sufficient to keep the plastic housing clean. Under no circumstances should the plastic filter housing come into contact with any proprietary cleaners such as kitchen sprays, bleach etc. as contact with certain chemicals can degrade the plastic and cause it to fail.
- The plastic housing must be replaced every 10 years due to the tendency of plastic materials to degrade and weaken over time.
- A smear of WRAS approved silicon grease applied to the filter sump thread and to the rubber sealing ring in the head of the filter at each cartridge change will make it easier to unscrew the sump. Only a WRAS approved alternative grease must be used for this purpose. Non-approved greases may degrade both the seal and the plastic housing and lead to eventual failure. Small tubes of WRAS approved silicon grease are available at www.qettle.com.

CHANGING THE FILTER CARTRIDGE

1. Operate the switch on the front of the boiler to switch off the boiler power supply.
2. Drain the system of boiling water by running the boiling water until it runs cold.
3. Shut off the water supply to the filter using the adjacent stop-valve.
4. Press the red button at the top of the filter unit to exhaust the pressure in the system. It will not be possible to unscrew the filter canister if this operation is not carried out.
5. Place a shallow container in the cabinet to catch any water residues when removing the filter sump. Grip the sump firmly and turn it firmly to the left to break the seal. Unscrew the sump by hand until it separates from the head of the filter.
6. If the old cartridge does not automatically fall free press down on the top mount of the cartridge to release it. Remove the old cartridge and discard the remaining water in the sump.
7. Remove the new filter cartridge from its packaging, wet the “O” seal and place it in the filter sump. Position the sump, with the cartridge inside, under the filter head and screw it in place. The cartridge should engage automatically. Tighten the sump, sufficient to make a water tight seal.
8. Turn the water supply ‘on’ and check the system carefully for leaks.
9. Operate the system and run the boiling water for a few moments until the water runs clear. Run the boiling water for a moment to release any trapped air.
10. Turn the boiler power supply back on.
11. Press and hold the reset button on the filter change indicator module for 5 seconds. The LED light on the tap will glow red, followed by yellow, and then the module will emit an audible beep. The filter change indicator is now reset.

SENSIBLE PRECAUTIONS

If you are planning to leave the premises for an extended period (over a week) it is a sensible precaution to turn off both the electricity supply and the water supply to your system.

FREQUENTLY ASKED QUESTIONS AND TROUBLESHOOTING GUIDE

THE BOILING WATER FLOW IS AGITATED AND NOISY

Please bear in mind that your Qettle 4-in-1 Tap system is dispensing boiling water, rather than very hot water, and as a consequence there will be the normal steam, agitation and noise associated with boiling water. Initially this may be alarming, but read through the technique suggested below and practice it a few times. Soon you will gain confidence and using the tap will be second nature. Bear in mind that your Qettle 4-in-1 tap dispenses water hotter than you are used to with a kettle.

TO OPERATE THE BOILING WATER FUNCTION.

Discharge a small amount of water until steam appears. Turn off the boiling water. Position the vessel over the outlet of the tap spout and continue to dispense boiling water by maintaining pressure on the handle. Gradually lower the vessel while keeping the spout just above the surface of the water.

WATER FAILS TO DISCHARGE FROM THE VENT TUBE AFTER POWER HAS BEEN SWITCHED ON TO THE BOILER FOR 20 MINUTES.

Check there is power to the boiler. The 'Plug' LED should be green.

Check there are no kinks in the vent hose.

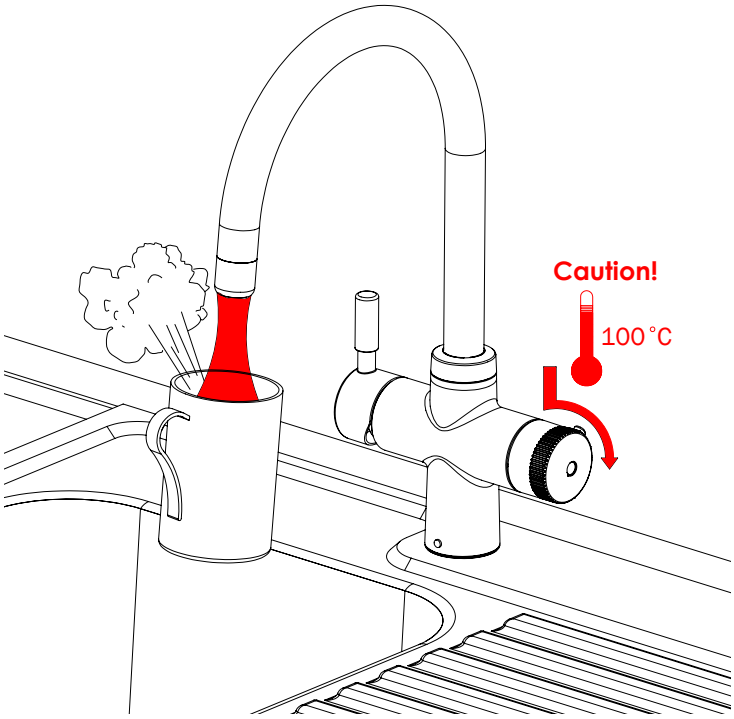

WATER IS CONTINUALLY DRIPPING/RUNNING INTO THE VENT ASSEMBLY.

Water continuously discharging from the vent indicates that the water pressure is too high; above the 5 bar (73 psi) stipulated maximum. In normal operation the pressure relief valve will allow water to drip for approximately 20 minutes after the boiler is switched on. Thereafter it will drip periodically; after water is drawn off and as the boiler comes back up to temperature.

Check the water pressure at a low demand period (mid morning or mid afternoon). If it exceeds 5 bar (73 psi) it will be necessary to install a 3-4 bar pressure reducing valve. A suitable valve can be purchased at www.qettle.com or from a plumber's merchant.

While waiting for the pressure relief valve to be fitted turn off the boiler and then shut off the water supply to the filter.

THE VENT ASSEMBLY IS OVERFLOWING.

Check that the hole has been properly cut in the waste pipe and if so that it is clear of any debris.

THE HOT WATER FLOW FROM THE TAP IS SLOW (NOT THE BOILING WATER).

Check the Hot water pressure. A minimum of 1.5 bar pressure is required.

THE COLD WATER FLOW FROM THE TAP IS SLOW (NOT THE FILTERED WATER).

Check the Cold water pressure. A minimum of 1.5 bar pressure is required.

ALL THE WATER FLOW THROUGH THE TAP IS SLOW

Unscrew and remove the aerator from the end of the spout and check it is clear of any debris.

THE FILTERED COLD AND BOILING WATER FLOW FROM THE TAP IS SLOW.

Generally this indicates that the filter cartridge is clogged with contaminants and needs replacing. You can check by operating the filtered water with no cartridge in the filter housing.

THE FLOW OF FILTERED BOILING WATER HAS SLOWED TO AN UNACCEPTABLE LEVEL INSIDE THE 6 MONTHS CHANGE PERIOD.

The period between cartridge replacements is not guaranteed; it is an estimate based on filtering mains water of average quality. Please bear in mind that water quality varies from locality to locality and situation to situation. In areas with higher than average turbidity (particle contamination) more frequent cartridge changes may be necessary.

THE BOILING WATER FUNCTION IS DISPENSING COLD WATER INSTEAD OF BOILING WATER

Check that the electrical supply is correctly connected.

Check the 13amp fuse in the plug.

If you are still experiencing problems after completing these steps please contact Qettle on 01603 875 464.

UNSIGHTLY DEPOSITS ON THE SURFACE OF A CUP OF TEA

In hard water areas a 'scum' can appear on the surface of hot tea. Although unsightly it is completely harmless. The cause is related to the precipitation of calcium and magnesium in hard water regions and a reaction with the tea bag material. Changing tea bags will often remedy the problem. Alternatively you can consider switching to a Q06 filter cartridge which will remove the calcium and magnesium however please note this filter will need to be changed more frequently, perhaps every 2- 3 months. The life of the Q06 filter is dependent on the hardness of the water supply and the volume of water passed through it, so is impossible to predict, however the return of the 'scum' on hot drinks is an indication it should be replaced.

FOAM OR A FILM IS FORMING ON THE SURFACE OF HOT DRINKS.

This is caused by a combination of the agitation of the boiling water creating millions of tiny air bubbles, the ph of the water and the amount of oil in the teabag material. Experimenting with different tea bags is worth a try.

To reduce the problem try filling the teapot or cup with boiling water before dropping the tea bag in rather than running the boiling water directly onto the teabag or perhaps experiment with different brands of tea bag.

MILKY OR CLOUDY APPEARANCE OF THE BOILING FILTERED WATER

A new filter cartridge has a significant amount of air trapped in the microporous structure of the cartridge. This will form tiny bubbles and give the water in the glass a milky appearance that will soon disperse when left to stand for a few moments. This may continue for 2 to 3 weeks until the cartridge is fully conditioned.

TINY BLACK SPECKS IN THE WATER

Tiny black specs may appear initially in the water. These are harmless particles of carbon; residues from the manufacturing process. Allow the filtered water to continue flowing for a while until they are completely flushed through.

CONDENSATION IS DRIPPING FROM EXPOSED COPPER PIPES ADJACENT TO THE BOILER.

This can be reduced by wrapping insulation around the pipes in question.

GUARANTEE

This Qettle product carries the following warranties against material and manufacturing defects:

Qettle Tap - 1 Year on the tap finish, 2 years on working parts

Qettle 4 Litre Boiler - 2 Years

Qettle water filter complete with a Q08 filter cartridge - 2 Years

The warranty will be valid from the date of purchase as shown on the sales invoice. Please keep the invoice for your records. This appliance is intended for domestic use only. The warranty does not apply to products installed outside a domestic environment.

WARRANTY

WHAT IS COVERED BY THE QETTLE GUARANTEE?

The repair or replacement of all or part of your system if your system is found to be defective due to faulty materials or manufacture within the relevant warranty periods at Qettle's discretion.

If any part is no longer available, or out of manufacture, Qettle reserve the right to replace it with a suitable alternative.

TERMS AND CONDITIONS OF THE QETTLE 2 YEAR GUARANTEE

The guarantee is valid for the UK.

The guarantee becomes effective at the date of purchase or at the date of delivery if this is later.

Proof of purchase is required under the terms of the guarantee.

The guarantee provides benefits in addition to your statutory consumer rights.

QETTLE DOES NOT GUARANTEE THE REPAIR OR REPLACEMENT OF A PRODUCT THAT HAS FAILED FOR ANY OF THE FOLLOWING REASONS:

- Faulty installation, repairs or alterations not in accordance with the installation guide.
- Normal wear and tear.
- Accidental damage or faults caused by negligent use or care; misuse; neglect; careless operation and failure to use the system in accordance with the Qettle operating guidelines.
- Failure to maintain the water filter in accordance with the instructions.
- The use of anything other than genuine Qettle replacement parts, including the water filter cartridge.
- The use of the filter system for anything other than normal domestic household purposes.
- Failures of, or failures caused by, parts not supplied as part of the genuine Qettle system.

HOW DO I MAKE A CLAIM UNDER MY GUARANTEE?

If you are in doubt about what is covered by your guarantee, or wish to discuss a claim, please call please call Qettle on 01603 875 464 Monday to Friday between the hours of 9.00am and 5.00pm.

If you are calling for the first time please have your receipt to hand so that we can record your date of purchase.

The company reserves the right to alter, change or modify product specifications without prior notice.

DECLARATION OF CONFORMITY

CE The Qettle boiler complies to and is in accordance with the following directives:

2006/95/EC Low Voltage Directive

2011/65/EU RoHS Directive

2009/125/EC Eco Design Directive

Protection Level: IP20

The Qettle boiler conforms to the requirements of the relevant EU guidelines.

The symbol on the product or on its packaging indicates that this product may not be treated as household waste. Instead it shall be handed over to the applicable collection point for the recycling of electrical and electronic equipment. By ensuring this product is disposed of correctly, you will help prevent potential negative consequences for the environment and human health, which could otherwise be caused by inappropriate waste handling of this product. For more detailed information about recycling of this product, please contact your local city office, your household waste disposal service or the shop where you purchased the product.

The Qettle 4-in-1 system is a product designed by Greg Rowe Ltd. England and is protected by the following patents: US9,958,075, GB1515293.7 and the following patent applications: 1517097.0, PCT/GB2016/052893, 1717969.8

NutRunna® is a registered trademark.
© Greg Rowe Ltd. All Rights Reserved

Qettle
Old Winery Business Park
Chapel Street
Cawston, Norfolk
NR10 4FE

Phone: +44 (0)1603 875 464
Email: support@qettle.com

Part No: 994553

Qettle is a trading name of Greg Rowe Limited